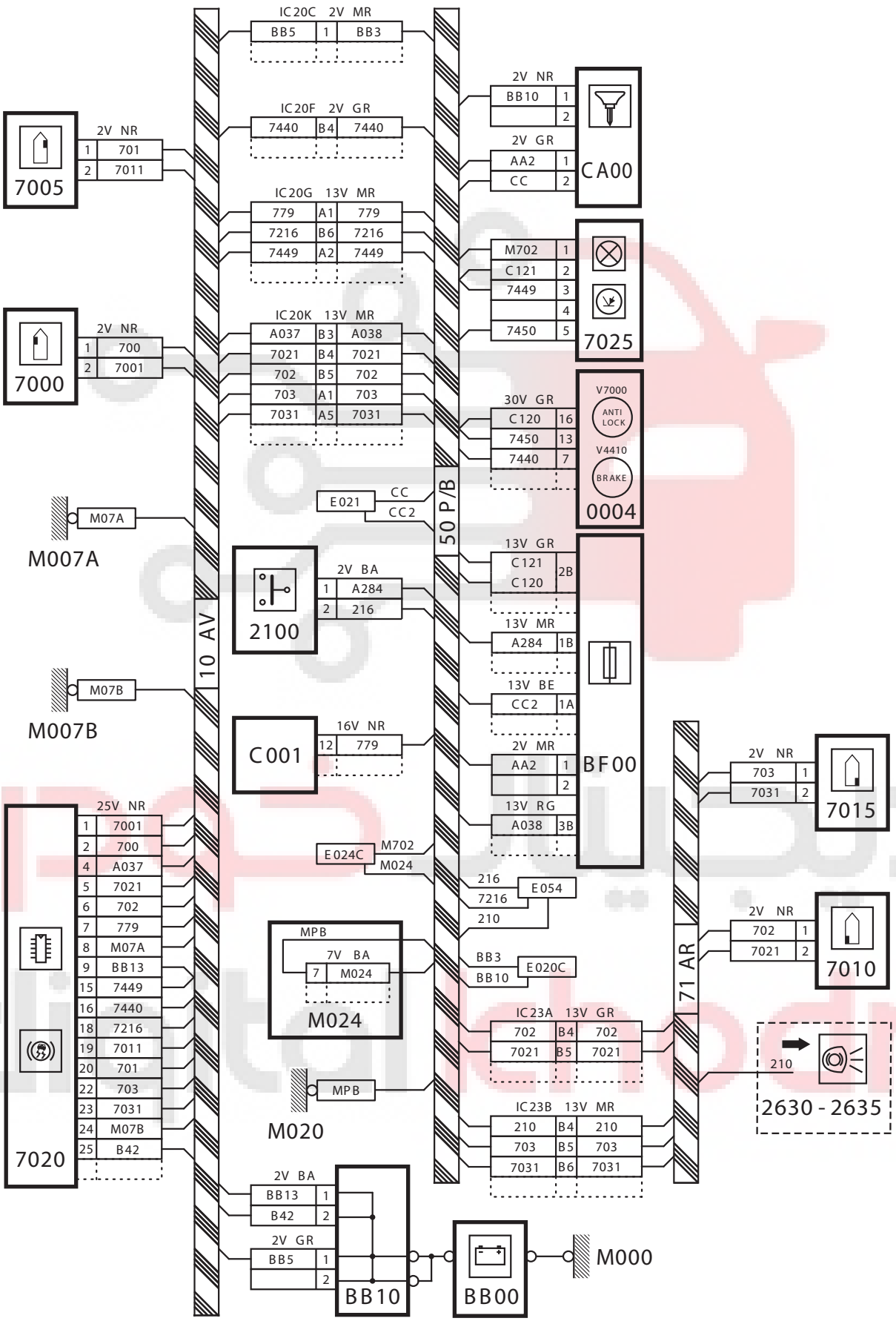

ANTILOCK BRAKE SYSTEM (ABS)